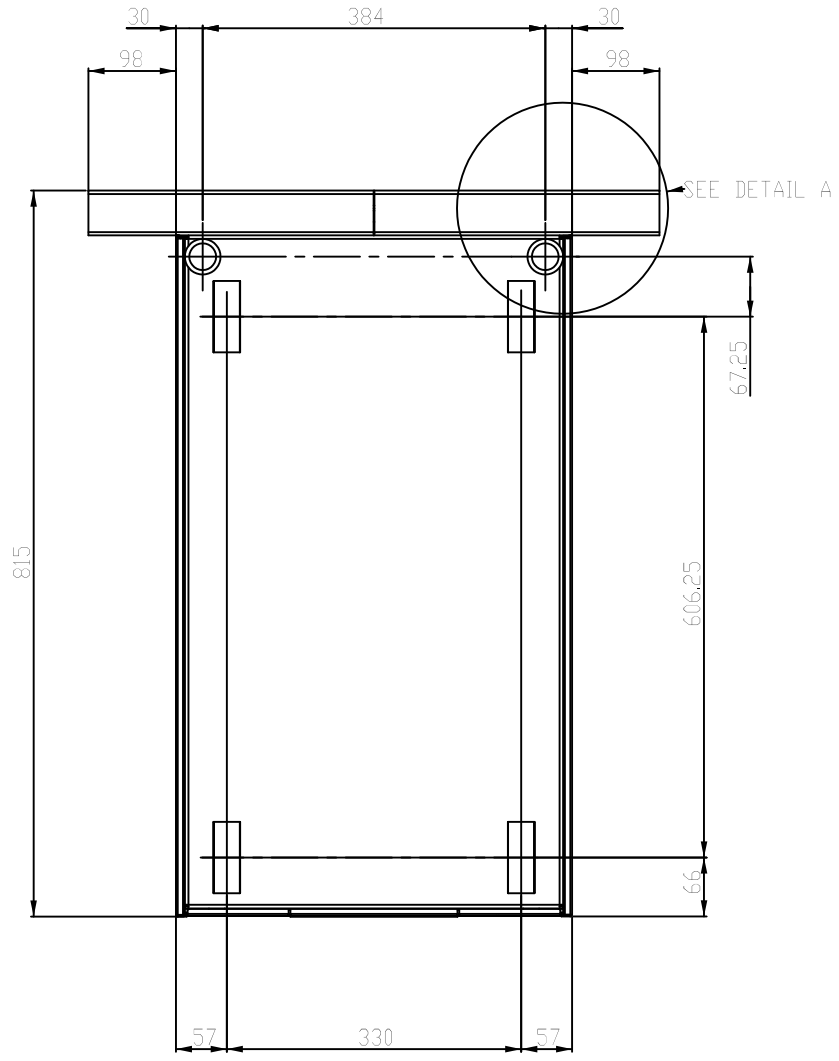

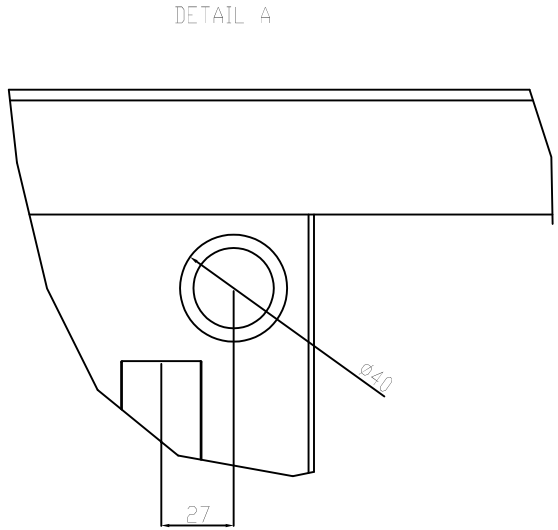

26.09.05	A	VAL	1st. EMISSION / 1ere EMISSION	XXXXX	XXXXX
DATE DATE	REV. REV.	ELABORATION ETABLI	MODIFICATIONS MODIFICATIONS	VERIFICATION VERIFIE	APPROBATION APPROUVE

Masterys MC 15-40kVA

FOOTPRINT VIEW

SOCOMEC SICON UPS

A3 | — | GB_MC15-40_FPV | REV: A