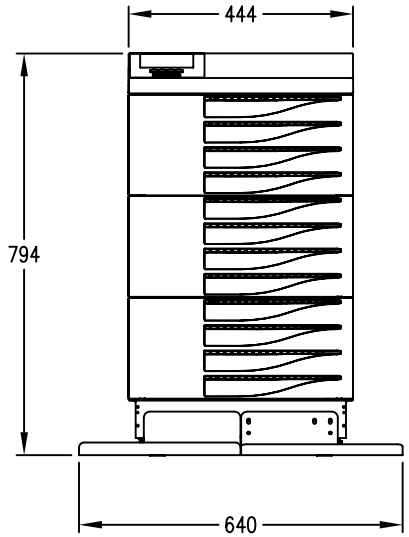

Vista frontale
Front view
Vue de devant

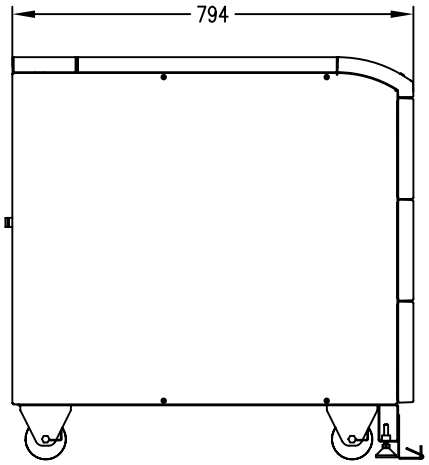

Vista laterale
Lateral view
Vue latérale

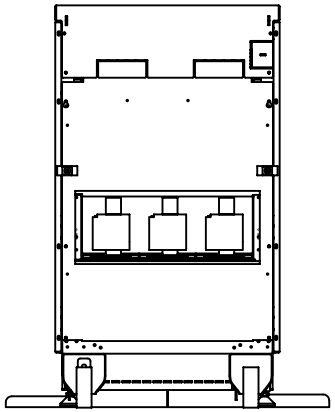

Vista posteriore
Rear view
Vue arrière

SCALE 1:10 | 3

04/07/2008	A	BACCARIN	FIRST EMISSION	TAMIOZZO A.	TAMIOZZO A.	R00
Data DATE	REV. REV.	Elaborato ISSUED BY	Modifiche MODIFICATIONS	VERIFICATO CHECKED BY	APPROVATO APPROVED BY	RELEASE

MASTERYS BC 8÷20 kVA

VISTE GENERALI
GENERAL VIEWS
GÉNÉRAL VUES

socomec Innovative Power Solutions UPS

3 DIS. **DRWMASMC1044079079_A** SEL FOGLIO: 001 A

Property of Socomec UPS. All rights reserved. No parts of this document may be used without the written permission of Socomec UPS. Socomec UPS reserves the right to add, modify or delete any information of this document at any time and without notice